Job Customer:

Title:

Ref:

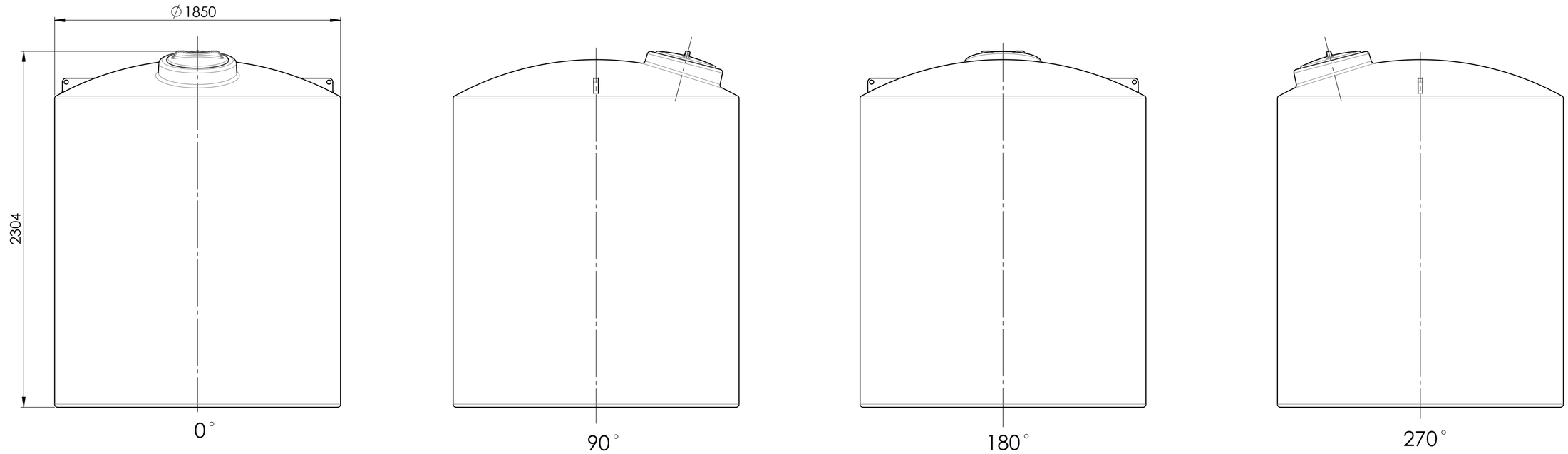

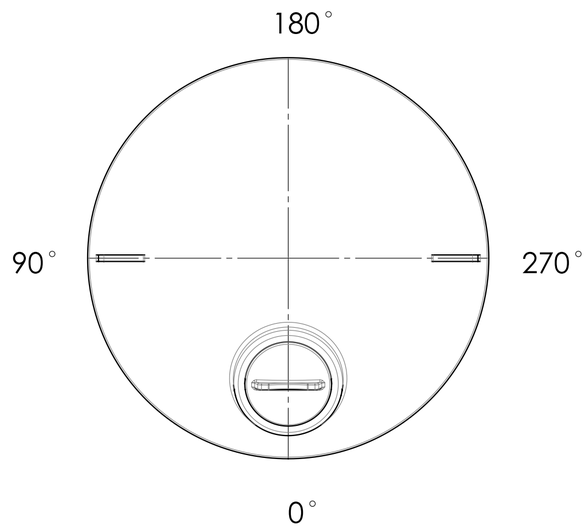

FITTINGS LAYOUT TABLE				
NOZZLE No	PE SIZE	LEVEL MARK	ANGLE	DESCRIPTION
N1				
N2				
N3				
N4				
N5				
N6				
N7				

NOTES:

UNLESS OTHERWISE SPECIFIED:
DIMENSIONS ARE IN MILLIMETERS
SURFACE FINISH:
TOLERANCES:
LINEAR:
ANGULAR:

FINISH:

DEBURR AND BREAK SHARP EDGES

DO NOT SCALE DRAWING

REVISION

promax ENGINEERED PLASTICS

NAME	SIGNATURE	DATE
DRAWN		
CHK'D		
APPV'D		
MFG		
Q.A		

MATERIAL:

WEIGHT:

TITLE:

5000L XPRESS TANK
(XI1305000)
NOZZLES LAYOUT

DWG NO.

A2

SCALE:1:20

SHEET 1 OF 1